BRAND HYDRAULICS CO.
Made in the Heartland of America

Shipping: 2332 S 25th St (Zip 68105)
Mailing: P.O. Box #6069 (Zip 68106)
Omaha NE
Phone: (402) 344.4434
Fax: (402) 341.5419
www.BRAND-HYD.COM

ISO 9001:2008 WITH DESIGN
Certificate #02.002.1

BG5, BGR5, & BGC5 STYLE PRIORITY DIVIDER INSTALLATION & USER GUIDE

SPECIFICATIONS:

- Rated for 3000 psi (207 bar).
- Rated for 0-30 gpm (0-113.6 lpm) max. priority.
- 30-Micron filtration recommended.
- Weight -BG, BGR & BGC = 5 lbs. (2.3 kg).

FEATURES:

- **Priority Port** – The priority port is identified by a number stamped into the casting identifying the priority flow rate. For example, a BG506-3/4 will have a priority flow rate of 6 gpm. Flow coming from the priority port is pressure compensated.

- **Excess Port** - Flow coming from the excess port is also pressure compensated.

MOUNTING & ADJUSTMENT INSTRUCTIONS:

- **Mounting** – Valve can be mounted in any orientation. Valve must be mounted on a flat surface. Special attention should be paid to not bend or twist the casting when mounting. Doing so may cause the compensator spool to bind, causing valve to fail. It is recommended to install washers between casting and mounting surface.

- **Relief Adjustment (BGR valve)** –Relief setting is factory preset to 1500 psi, unless otherwise noted within model code. Relief valve can be set anywhere within the range of 500 psi to 3000psi.
  To adjust relief pressure: There is a 5/16" hex screw located inside the excess port. Turning the screw in, or clockwise 1 full turn will increase pressure by 800 psi.

FREQUENTLY ASKED QUESTIONS:

Q: Can the priority port be blocked or plugged?
A: No. If the priority port is blocked or plugged for any reason the compensation spool will attempt to compensate for increasing pressure, and shift thus blocking the excess port as well, and rendering valve inoperable. DO NOT BLOCK THE PRIORITY PORT.

Q: Can the Excess Port be blocked or plugged?
A: The Excess Port can be blocked or plugged, but doing so requires a pressure compensated or load sense pump. Plugging the excess port may create instability issues that can be remedied by switching the compensator spool to a different spool. (Part # XDC609) Note: XDC609 must have a drilled orifice that correlates to the valves flow rate.

Q: Can flow be sent in reverse through valve.
A: Yes, but only if you have a BGC5 valve. If you're unsure of your valve's model number, please contact factory for assistance.

Q: Can I add a relief to my standard BG OR BGC valve?
A: It is not possible to add a built-in relief to a standard BG or BGC valve. The casting is different, which prevents this.

Shipping: 2332 S 25th St (Zip 68105)
Mailing: P.O. Box #6069 (Zip 68106)
Omaha NE
Phone: (402) 344.4434
Fax: (402) 341.5419
www.BRAND-HYD.COM

Made in the Heartland of America

ISO 9001:2008 WITH DESIGN
Certificate #02.002.1

TROUBLESHOOTING:

Problem: ***Valve chatters or has stability issues.*** Instability generally occurs when the valve sees an application that has rapidly changing loads. (ie: Fan, Vibration, etc.) Because of these changing loads the compensator spool tries to compensate rapidly. This causes the valve to become unstable, as well as begin to make noises, including a chatter.

Solution: Most instability issues can be solved by using a different compensator spool. A replacement spool designed for load changing applications can be ordered. (Part #: XDC609) XDC609 must have a drilled orifice that correlates to the valves flow rate.

GENERAL INFORMATION:

Pipe Thread Sealant - Warranty is void when Teflon tape is used to seal pipe threads. This is because Teflon tape is a friction reducing agent which allows customers to over-torque fittings. We recommend using a sealant that does not include friction reducing agents i.e. Lead Plate.

DIMENSIONAL DATA:

BG5, BGR5, & BGC5 DIMENSIONAL DATA (BG5 SHOWN)

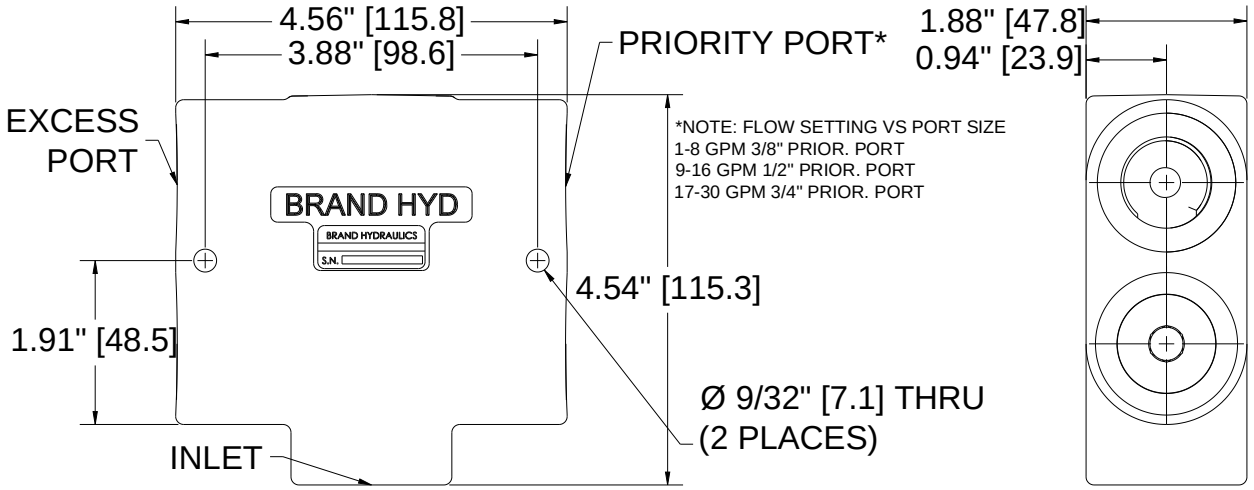

SAFETY PRECAUTIONS:

- It is the purchaser's responsibility to determine the suitability of any Brand Hydraulics Co. product for an intended application, and to ensure that it is installed in accordance with all federal, state, local, private safety and health regulations, codes and standards. Due to the unlimited variety of machines, vehicles and equipment on which our products can be used, it is impossible for Brand Hydraulics Co. to offer expert advice on the suitability of a product for a specific application. It is our customer's responsibility to undertake the appropriate precautions, testing and evaluation to prevent injury to the end-user.
- Overpressure may cause sudden and unexpected failure of a component in the hydraulic system, resulting in serious personal injury or death. Always use a gauge when adjusting a relief valve.